JACS

FORMING THE FUTURE

GATEWAY FEATURE

4.03

PRODUCT ADVANTAGES :

- Weather and waterproof
- Easy to clean, low maintenance
- Will not rot or rust
- Warm to touch and handle
- 100% Recycled Plastic
- No splintering
- Simple to cut and fix
- Robust and durable
- Low TLC (Total Life Costs)
- Variety of designs available
- Quick installation
- Supplied assembled or flat packed
- Bespoke design undertaken
- Available in Timber if required

GATEWAY FEATURES ARE IDEAL FOR :

- Villages Boundaries
- 20 MPH Speed Demarcation
- Highways
- Country Parks and Walks
- Rights of Way / Rural Walks
- Tourist Attractions
- Large Parks and Open Spaces
- Housing Developments
- Speed Reduction Scheme
- Historic and Heritage Sites
- Holiday Parks and Camp Sites
- Quiet Lane Schemes
- Driver Awareness Schemes

JACS (UK) Limited Unit 16 Hercules Way Bowerhill Industrial Estate MELKSHAM Wiltshire SN12 6TS

Tel: 01225 700202 Fax: 01225 700152 Website: www.jacsuk.com

JACS

FORMING THE FUTURE

GATEWAY FEATURE

4.03a

1,000mm WIDE WHITE VILLAGE GATEWAY

PRODUCT INFORMATION

- Material - 100% Recycled Plastic
- Colour - White (Black, Grey and Brown available)
- Dimensions - All Dimensions in mm

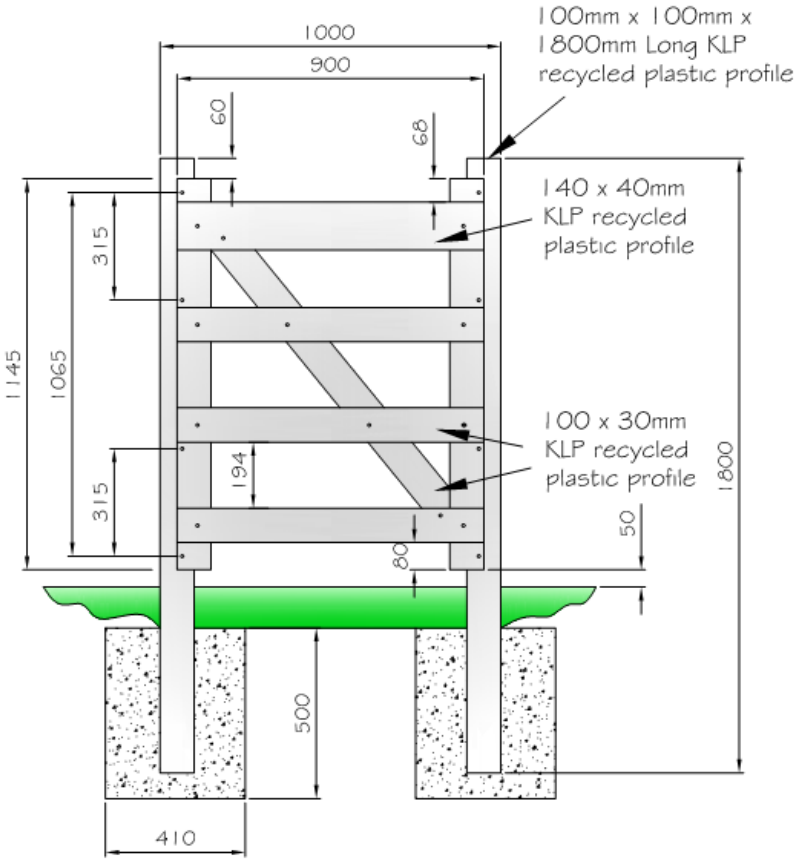

1,800mm WIDE WHITE VILLAGE GATEWAY

PRODUCT INFORMATION

- Material - 100% Recycled Plastic
- Colour - White (Black, Grey and Brown available)
- Dimensions - All Dimensions in mm

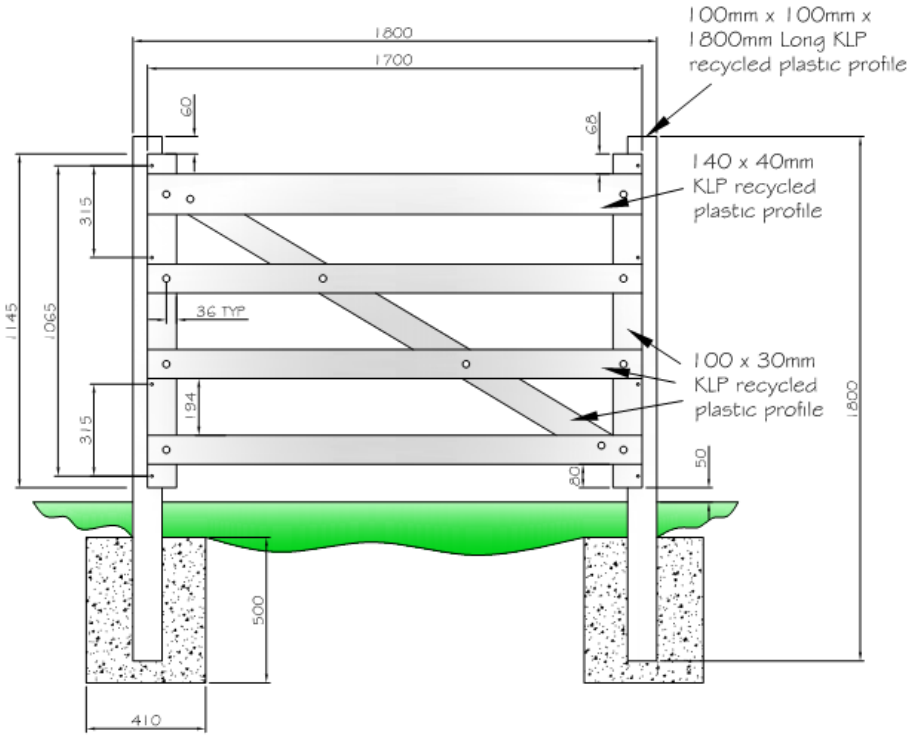

JACS (UK) Limited Unit 16 Hercules Way Bowerhill Industrial Estate MELKSHAM Wiltshire SN12 6TS

Tel: 01225 700202 Fax: 01225 700152 Website: www.jacsuk.com